31 August 2020
Ref: 9110 A

Concrib Pty Ltd
601 Boundary Rd
RICHLANDS, QLD 4077

Structural Design Certificate

Concrete Sleeper Retaining Walls (Steel Posts)

473 MILES PLATTING ROAD, ROCHEDALE

We have carried out a structural analysis of the proposed concrete sleeper retaining walls and consider the following design to be structurally adequate as defined by the Building Code of Australia and the principles of structural mechanics.

The design is based upon the assumption that the wall is located in an area not subject to land slip. Investigation of the site for landslip is outside the scope of this certification. Consult a qualified Geotechnical Engineer for analysis in areas of possible land slip.

Design Summary (refer to sheet SK1 & SK2 for approximate wall locations)

Typical Retaining Wall

- Retained and founding material to be Stiff Natural Clay or Controlled Fill (Class 2 min. - AS4678)
- Near flat ground in front and behind the wall
- No services in the vicinity of the wall
  (Where site conditions vary from those noted, the engineer should be consulted for re-design)

Footings

Wall Height	Footing Pier Diameter	Footing Depth	Pier Reinforcement
900mm and less	350mm	Wall Height + 200mm*	Post Reinforcing
1050mm to 1500mm	350mm	Wall Height + 300mm	Post Reinforcing
900mm and less	450mm	Wall Height + 100mm*	Post Reinforcing
1050mm to 1950mm	450mm	Wall Height + 150mm	Post Reinforcing
2100mm	450mm	Wall Height + 150mm	2/N24 bars full height

Notes:

- *Refer to note (3) specifically relating to services. Builder to confirm depths and locations of any services prior to any construction work of retaining walls.*
- *All posts to be Hot Dip Galvanised after fabrication*
- *Bar laps to be N12-500mm, N16-600mm, N20-800mm, N24-1000mm, N28-1200mm and N32-1400mm*
- ** Denotes footing pier to be 1000mm deep min*

Retaining Wall 'A'

- Retained and founding material to be Stiff Natural Clay or Controlled Fill (Class 2 min. - AS4678)
- 1.2m wide bench in front of wall and then 1.3m wide 1V:2H toe batter slope
- Near flat ground behind the wall
- Basin in front of wall approx. 2.5m min. clearance
- Buoyant foundation ground
- No services in the vicinity of the wall
  (Where site conditions vary from those noted, the engineer should be consulted for re-design)

Footings

Wall Height	Footing Pier Diameter	Footing Depth	Pier Reinforcement
750mm and less	450mm	1150mm	Extend rear bars to base
900mm	450mm	1350mm	Extend rear bars to base
1050mm	450mm	1600mm	Extend rear bars to base
1200mm	450mm	1900mm	Extend rear bars to base
1350mm	450mm	2150mm	Extend rear bars to base
1500mm	450mm	2450mm	Extend rear bars to base

Notes:

- *Refer to note (3) specifically relating to services. Builder to confirm depths and locations of any services prior to any construction work of retaining walls.*
- *All posts to be Hot Dip Galvanised after fabrication*
- *Bar laps to be N12-500mm, N16-600mm, N20-800mm, N24-1000mm, N28-1200mm and N32-1400mm*

Retaining Wall 'B'

- Retained and founding material to be Stiff Natural Clay or Controlled Fill (Class 2 min. - AS4678)
- Near flat ground in front and behind the wall
- Electrical conduit 0.6m clear in front of the wall (Assumed install prior to wall construction – advise engineer if otherwise)
  (Where site conditions vary from those noted, the engineer should be consulted for re-design)

Footings

Wall Height	Footing Pier Diameter	Footing Depth	Pier Reinforcement
1200mm to 1500mm	450mm	Wall Height + 650mm	Extend rear bars to base

Notes:

- *Refer to note (3) specifically relating to services. Builder to confirm depths and locations of any services prior to any construction work of retaining walls.*
- *All posts to be Hot Dip Galvanised after fabrication*
- *Bar laps to be N12-500mm, N16-600mm, N20-800mm, N24-1000mm, N28-1200mm and N32-1400mm*

Retaining Wall 'C'

- Retained and founding material to be Stiff Natural Clay or Controlled Fill (Class 2 min. - AS4678)
- Near flat ground in front and behind the wall
- 300/225/150mm Roofwater pipe 0.5m clear behind the wall
  (Where site conditions vary from those noted, the engineer should be consulted for re-design)

REFER TYPICAL WALL DESIGN

Retaining Wall 'D'

- Retained and founding material to be Stiff Natural Clay or Controlled Fill (Class 2 min. - AS4678)
- Near flat ground in front and behind the wall
- 160mm Diam. Existing Sewer pipe 1.75m clear in front of the wall & approx. 2m deep
- 3m min. of level ground in front of wall before batter
- 300/225/150mm Roofwater pipe 0.5m clear behind the wall in backfill
- 2m wide Swale (75mm deep upstream & 150mm deep downstream) and Easement behind wall
  (Where site conditions vary from those noted, the engineer should be consulted for re-design)

REFER TYPICAL WALL DESIGN

Retaining Wall 'E'

- Retained and founding material to be Stiff Natural Clay or Controlled Fill (Class 2 min. - AS4678)
- Near flat ground in front and behind the wall
- Electrical conduit 0.6m clear in front of the wall (Assumed install prior to wall construction – advise engineer if otherwise)
- 160mm Diam. Existing Sewer pipe 1.75m clear in front of the wall & approx. 2m deep
  (Where site conditions vary from those noted, the engineer should be consulted for re-design)

Footings

Wall Height	Footing Pier Diameter	Footing Depth	Pier Reinforcement
900mm and less	350mm	Wall Height + 700mm*	Extend rear bars to base
1050mm	350mm	Wall Height + 800mm	Extend rear bars to base
900mm and less	450mm	Wall Height + 600mm*	Extend rear bars to base
1050mm	450mm	Wall Height + 550mm	Extend rear bars to base

Notes:

- *Refer to note (3) specifically relating to services. Builder to confirm depths and locations of any services prior to any construction work of retaining walls.*
- *All posts to be Hot Dip Galvanised after fabrication*
- *Bar laps to be N12-500mm, N16-600mm, N20-800mm, N24-1000mm, N28-1200mm and N32-1400mm*
- ** Denotes footing pier to be 1000mm deep min*

Where sleeper walls pass over services, the builder should ensure they are located on-site and that the minimum footing clearance is provided in accordance with council requirements. Post footing piers either side of services should be founded a minimum of 300mm below the invert level of the services.

The design is also based on the assumption that after cutting, filling and compacting the site, the surface level for the retaining walls will be stiff natural ground or controlled compacted fill (150 kPa minimum allowable bearing capacity). If this is not the case and the surface is a soft or loose material, then the engineer should be consulted for a re-design or this material is to be removed and replaced with controlled fill (class 1 & level 1).

The retained and founding soil design parameters are based upon information contained in the geotechnical investigation by Protest Engineering in report (Project Number: PTP/05398-0001) dated 26 August 2020. Any additional soil testing information is to be provided to the engineer prior to commencement of construction.

The retaining wall design uses the following assumptions and soil parameters:

Criteria		Value
Retained Material: Very Stiff Natural Sandy Clay or better or Controlled Fill (Class 2 min. – AS4678)	Density	18 kN/m^3 (Fill) 19 kN/m^3 (Natural)
	Characteristic Soil Friction Angle	35 degrees (Sand Fill) 25 degrees (Clay Fill) 26 degrees (Stiff Natural Clay)
	Material Capacity Reduction Factor	0.85 (Natural) 0.9 (Fill)
	Characteristic Cohesion	0 kPa (Sand Fill) 2 kPa (Clay Fill) 5 kPa (Stiff Natural Clay)
	Material Capacity Reduction Factor	0.7 (Natural) 0.75 (Fill)
Founding Material: Very Stiff Natural Sandy Clay or better or Controlled Fill (Class 2 min. – AS4678)	Density	18 kN/m^3 (Fill) 19 kN/m^3 (Natural)
	Characteristic Soil Friction Angle	25 degrees (Fill) 26 degrees (Stiff Natural Clay)
	Material Capacity Reduction Factor	0.85 (Natural) 0.9 (Fill)
	Characteristic Cohesion	0 kPa (Sand Fill) 2 kPa (Clay Fill) 5 kPa (Stiff Natural Clay)
	Material Capacity Reduction Factor	0.7 (Natural) 0.75 (Fill)
Geometry:	Slope on Top of Wall	Near flat
	Slope at Base of Walls	Near flat (refer summary)
Loads:	Live Loads (Imposed Loads)	5 kPa
Load Factors:	Soil Load	1.25
	Live Loads (Imposed Loads)	1.5

Note: The walls are not designed to support building loads.

The design of the retaining walls is based upon the requirements of AS 4678-2002 “Earth-retaining structure” for a structure classification B, and AS 3600 “Concrete Structures Code”.

The walls are to be constructed using Concrib Retaining Wall’s “Concrete Sleeper Retaining Wall” system. The system consists of vertical Hot Dip Galvanized Steel Posts at 2m centres (except as directed on site or noted otherwise in this report) and horizontal concrete sleepers as shown on the following drawings.

_____

For and on behalf of
Inertia Engineering Pty Ltd.
David Kelly
BE Civil (Hons.), RPEQ 7561.

Inertia

Notes:

1. The wall is to be constructed in accordance with Concrib specifications. This certification only applies to sleeper walls constructed using Concrib manufactured products. If other manufactured products are substituted the certificate becomes null and void.
2. Footings to be founded in material complying with the design criteria. Advise the engineer should any design criteria not apply.
3. Stormwater, sewer, water supply, electricity and communication service trenches are not be located in front of the wall within a distance equal to twice the depth of the trench u.n.o. Advise the engineer should a service be located in this zone. Compaction testing of the service trench backfill and additional pier depth will be required. The trench backfill shall be compacted to at least: (a) 95% MDD (Standard) at 800mm and greater above the top of the pipe; (b) 85% MDD (Standard) at 500mm above the top of the pipe or backfill with stabilized sand or no fines concrete
4. The height is measured as the height of the material being retained at the back of the wall.
5. Ensure the wall is not constructed to heights greater than stated above.
6. The wall is not intended to support surcharge from buildings. The underside of a building footing is not to be located above a line drawn from the bottom of the retaining wall at a slope of 1.5 horizontal to 1 vertical where in clay soil and at a slope of 2 horizontal to 1 vertical where in sand.
7. The design engineer must be consulted before excavating any ground in front of a retaining wall. Excavation may undermine the retaining wall and cause wall instabilities.
8. Unless noted otherwise the retaining wall is designed to support a timber fence 1.8m high, for a site ultimate wind speed of 40m/s (N2 wind classification) and a net pressure coefficient of 1.2. The fence posts may connect directly to the steel retaining wall posts with an approved method. Alternatively the fence may have separate appropriately designed footings which are to be located directly behind the posts. The fence is to extend beyond the end of the wall or return at right angles for at least 3.6m.
9. Some horizontal movement of the wall may occur after construction. Elements sensitive to ground movement should not be located within a horizontal distance equal to the height of the wall.
10. Imported fill to embankments to be retained shall have a shrink/swell index of not greater than 1.0%.
11. It is preferable to overfill embankments and then trim back for the retaining wall which will ensure compaction. If circumstances arise and the wall must be backfilled after construction then use controlled fill (Class 2 minimum) in accordance with AS4678 [Cl 1.4.3.3]. The compaction within 1m behind the wall or within a distance behind the wall that is equal to the wall height (whichever is greater) must be carried out by hand held pneumatic compaction equipment as heavy machinery should not be used close to the wall.
12. Backfill behind retaining walls with free draining granular material encompassing a continuous 100mm diameter slotted pvc pipe with a fall to a legal point of discharge under and beyond the front of the wall at 20m maximum centres. Provide geofabric between granular material and embankment/top cover material and lap geofabric 200mm minimum. Top plug/cover material to be 600mm thick of clayey material compacted by hand operated equipment. Ensure a minimum 200mm thickness of granular material for all sites. Where retaining walls are greater than 2m high, increase the width of free draining granular material to average an additional one eighth (1/8) of the wall height where the retained material is of reactivity class 'H' or greater.
13. Construct the face of walls in expansive soil sites to lean into the retained material with a face slope of 1 horizontal to 50 vertical.
14. On expansive soil sites the wall may move after construction due to variations in soil moisture content.
15. Stormwater/Surface water is not to be directed and concentrated to an area whereby discharging over or into a sleeper retaining wall.
16. Sleeper units which have been cut to length shall have the exposed cross–section of reinforcing bar coated with a two pack structural epoxy (e.g. Fosroc – Lokset E with a 1mm minimum thickness coating)
17. The minimum bearing of the sleeper panel behind the front flange shall be 30mm for walls up to and including 1.5m high and 40mm for walls 1.65m and higher.
18. Sleeper units shall be continuous between posts.
19. Steel posts to be Hot Dip Galvanised after fabrication in accordance with AS4680. Minimum zinc coating thickness to be 600g/m^2
20. Fill any gaps greater than 10mm between the face of a sleeper panel and the post. The gap is to be measure as the distance between the outer face of each sleeper within the panel and the rear of the post.
21. Repair local damage (e.g. broken corners) to posts and sleepers with non-shrink grout (minimum compressive strength 50MPa).
22. Seek direction from the engineer regarding action to repair or replace any severely damaged or cracked sleepers or posts.
23. Where trimming the end of sleeper panels over concrete footing piers at stepping walls, a 150mm (Max.) high to be notched from a 450mm high or greater Panels. If larger a 300mm (Max.) high notch from a 750mm high panel is allowable.
24. Sleeper walls designed for stability whilst all service trenches are backfilled & compacted as per note 3 above. If service trenches near walls need to be excavated then temporary propping or dismantling of the sleeper wall will be required due to instability.
25. Footings for single wall height posts at intersections where there is a step between lots should be typical for the total length of the post even where the retained height is less.
26. It is assumed that electrical and NBN trenches are installed prior to construction of retaining walls. Advise engineer if otherwise.

Inertia

PROJECT NO.: 9110
NAME: DAVID KELLY
SIGNATURE:
DWG NO.: SK1 A
DATE: 08/20

ABN 82 115 498 023
info@inertiaeng.com.au
P 07 3857 7868
F 07 3262 7359
Unit 5B, 85 Hudson Road
Albion, QLD 4010
inertiaeng.com.au

©Copyright of this engineering design and plan is the property of Inertia Engineering Pty Ltd

NOTES

- **A**: CUSTOM POST
- **B**: BRIDGE SERVICE PIPE
- **C**: CORNER POST
- **E**: EQUAL ANGLED POST TO PANELS

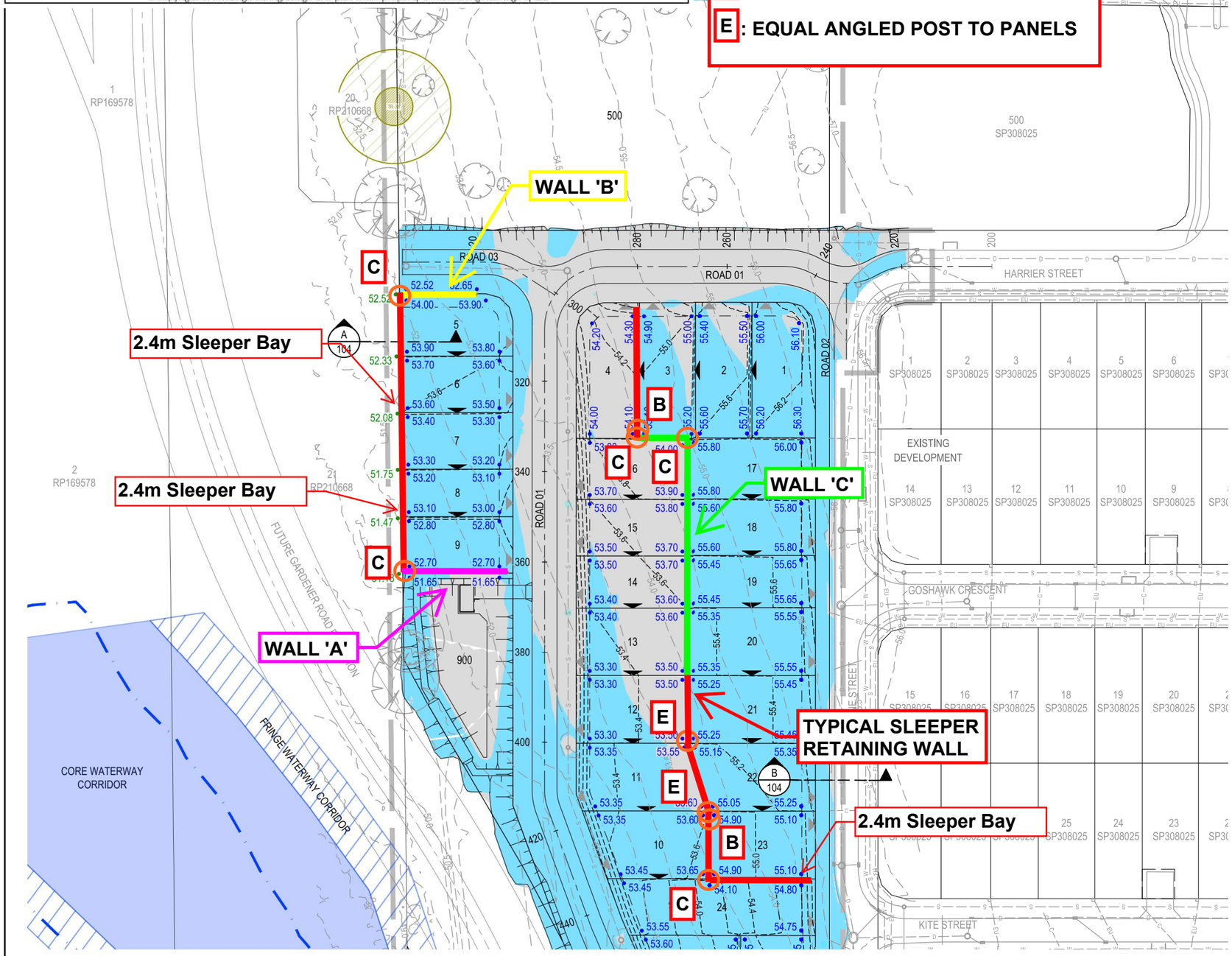

REFER SHEET 2 FOR CONTINUATION

LEGEND

- PROPOSED STAGE BOUNDARY
- 42.0 PROPOSED SURFACE CONTOUR
- 42.0 EXISTING SURFACE CONTOUR
- PROPOSED EARTHWORKS PAD SETBACK LINE
- PROPOSED CONCRETE SLEEPER RETAINING WALL
- PROPOSED BATTER
- PROPOSED DRAINAGE SWALE
- WATERWAY CORRIDOR Q100 EXTENTS
- 53.80 PROPOSED FINISHED SURFACE LEVEL (FSL) (INCLUDES TOPSOIL PLACEMENT)
- 52.64 EXISTING SURFACE LEVEL (ESL)
- PROPOSED AREA OF CUT
- PROPOSED AREA OF FILL
- INDICATIVE DRIVEWAY LOCATIONS
- ZERO LOT BOUNDARY
- EXISTING STORMWATER DRAINAGE PIPE
- EXISTING SEWERAGE MAIN
- EXISTING WATER MAIN
- EXISTING ELECTRICAL CABLE U/G
- EXISTING ELECTRICAL CABLE O/H
- EXISTING TELECOMMUNICATION CABLE U/G
- EXISTING GAS MAIN
- EXISTING TREE TO REMAIN - REFER VMP
- EXISTING TREE TO BE REMOVED - REFER VMP

WARNING! - EXISTING SERVICES

EXTREME CARE SHOULD BE TAKEN WHEN EXCAVATING IN THIS AREA. THE FOLLOWING EXISTING SERVICES ARE LIKELY TO BE PRESENT IN THE VICINITY OF THE SITE:

- ELECTRICAL CABLES
- TELECOMMUNICATIONS CABLES
- GAS MAINS
- WATER MAINS
- SEWER MAINS

THE CONTRACTOR SHOULD CONTACT THE SERVICE PROVIDER FOR FURTHER INFORMATION AND SATISFY THEMSELVES OF ANY SPECIFIC TREATMENT OR REQUIREMENTS.

SCALE
1:500 10 5 0 10 20 A1
1:1000 A3

PROJECT NAME
PROPOSED RESIDENTIAL DEVELOPMENT

473 MILES PLATTING ROAD
ROCHEDALE

Inertia

ABN 82 115 498 023
info@inertiaeng.com.au
P 07 3857 7868
F 07 3262 7359
Unit 5B, 85 Hudson Road
Albion, QLD 4010
inertiaeng.com.au

PROJECT NO.: 9110
NAME: DAVID KELLY
SIGNATURE:
DWG NO.: SK2 A
DATE: 08/20

©Copyright of this engineering design and plan is the property of Inertia Engineering Pty Ltd

NOTES

- **A**: CUSTOM POST
- **B**: BRIDGE SERVICE PIPE
- **C**: CORNER POST
- **E**: EQUAL ANGLED POST TO PANELS

WARNING! - EXISTING SERVICES

EXTREME CARE SHOULD BE TAKEN WHEN EXCAVATING IN THIS AREA. THE FOLLOWING EXISTING SERVICES ARE LIKELY TO BE PRESENT IN THE VICINITY OF THE SITE:

- ELECTRICAL CABLES
- TELECOMMUNICATIONS CABLES
- GAS MAINS
- WATER MAINS
- SEWER MAINS

THE CONTRACTOR SHOULD CONTACT THE SERVICE PROVIDER FOR FURTHER INFORMATION AND SATISFY THEMSELVES OF ANY SPECIFIC TREATMENT OR REQUIREMENTS.

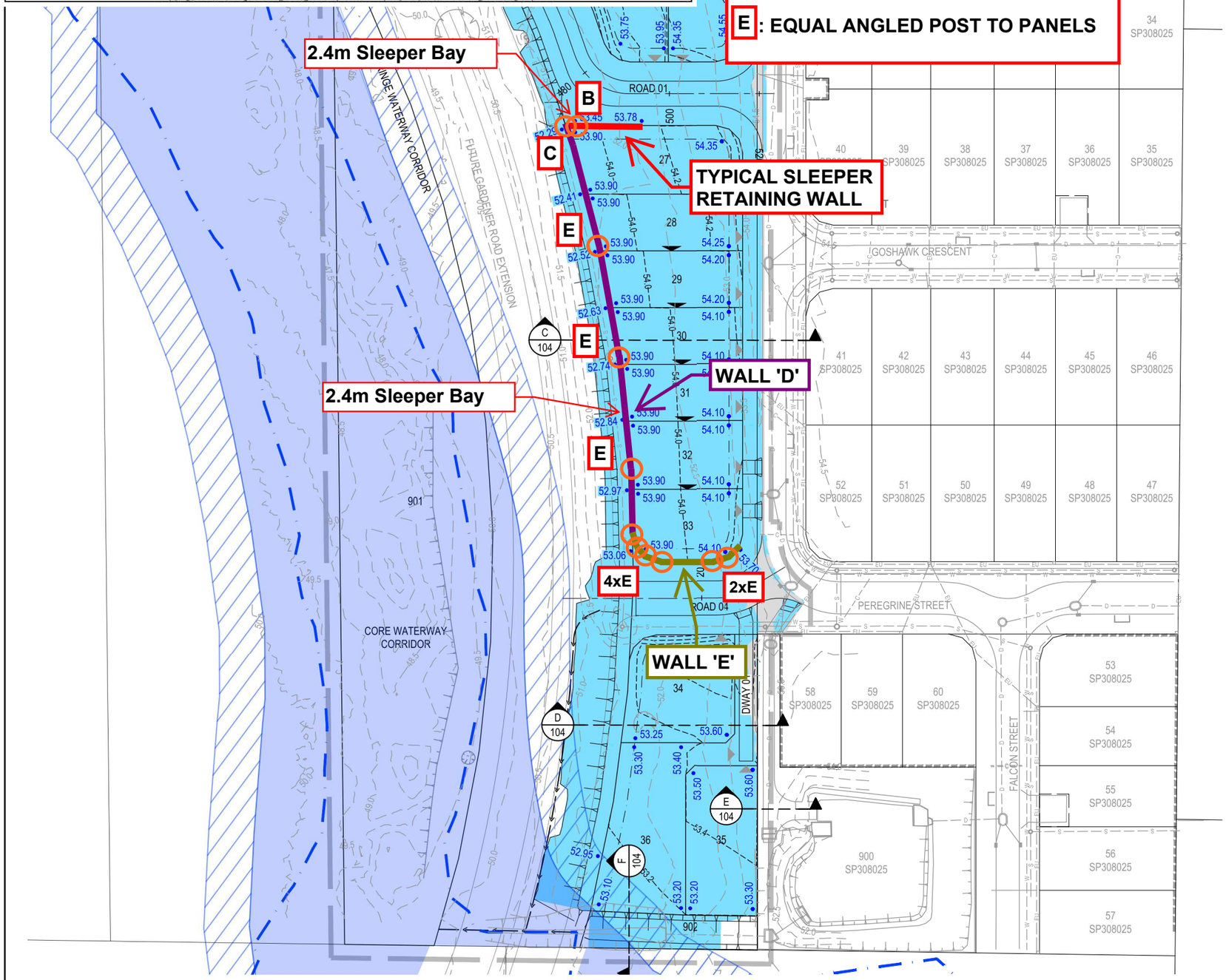

SCALE

1:500 10 5 0 10 20 A1
1:1000 A3

PROJECT NAME

PROPOSED RESIDENTIAL DEVELOPMENT

473 MILES PLATTING ROAD
ROCHEDALE

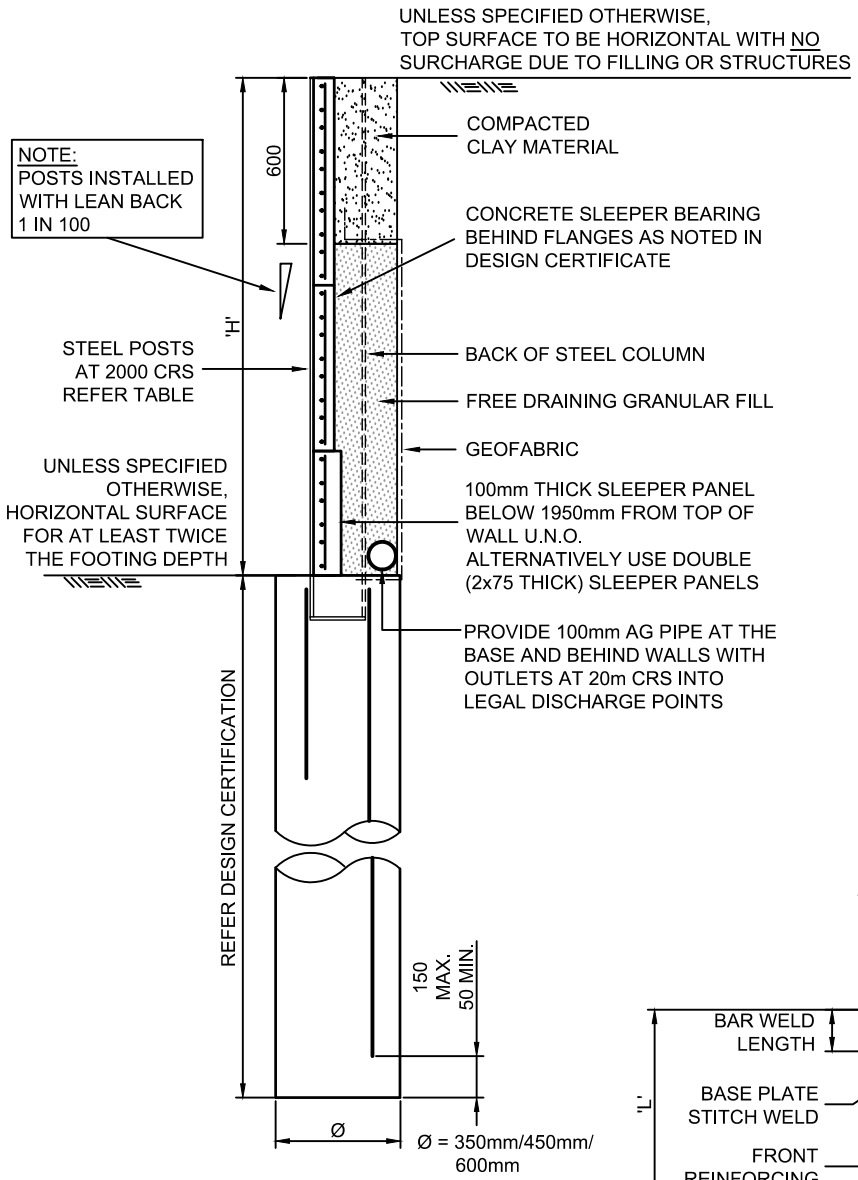

SECTION - TYPICAL SLEEPER WALL

NOTES:

1. DESIGN IS BASED UPON:
   EARTH-RETAINING STRUCTURES CODE AS 4678
   CONCRETE STRUCTURES CODE AS 3600
   BRIDGE DESIGN (PART 5 CONCRETE) AS 5100.5
   STEEL STRUCTURES CODE AS 4100
   BUILDING CODE OF AUSTRALIA
   PROTOTYPE TESTING AT THE UNIVERSITY OF QUEENSLAND

2. LAND SLIPS (E.G. SLIP CIRCLE FAILURE MECHANISMS)
   HAVE NOT BEEN CONSIDERED IN THE RETAINING WALL DESIGN.
   THE DESIGN IS BASED UPON THE ASSUMPTION THAT
   THE WALL IS FOUNDED ON GROUND NOT SUBJECT TO SLIP.
   THE DETERMINATION OF THE SITE SUSCEPTIBILITY TO SLIP
   IS THE RESPONSIBILITY OF THE PROJECT ENGINEER
   AND THE GEOTECHNICAL CONSULTANT AND IS BEYOND THE
   SCOPE OF WORK OF CONCRIB AND INERTIA ENGINEERING
   PTY LTD.

3. RETAINING WALL DESIGNED FOR 5kPa IMPOSED LOADING U.N.O.

4. FOR 60yr DESIGN LIFE (AS 3600)
   40 MPa CONCRETE WITH 25mm COVER FOR SLEEPER PANELS
   MORE THAN 2km FROM ALL COASTLINE.
   50 MPa CONCRETE WITH 25mm COVER FOR SLEEPER PANELS
   WITHIN 1km FROM THE COAST AND UP TO 2km
   FROM BREAKING SURF AND WHERE IN BIO-RETENTION BASINS.

5. FOR 100yr DESIGN LIFE (AS 5100)
   50MPa CONCRETE WITH 40mm COVER FOR SLEEPER PANELS
   SUITS B2 EXPOSURE CLASSIFICATION & 30mm COVER FOR B1
   CLASSIFICATION.

DESIGN PARAMETERS

REFER DESIGN CERTIFICATION FOR RETAINED AND
FOUNDING SOIL DESIGN PARAMETERS,
DESIGN SURCHARGE LOADS AND WALL DESIGN GEOMETRY

CONCRETE STANDARD - AS 3600
STANDARD DESIGN EXPOSURE CLASSIFICATION
SLEEPERS & POSTS - B1, FOOTINGS - A2

ELEMENT	GRADE	SLUMP	MIN. COVER
SLEEPER	N40	50mm	25mm*
FOOTING	N25	80mm	75mm

* RIGID FORMWORK & INTENSE COMPACTION

REINFORCEMENT
STANDARD - AS/NZS 4671
YIELD 500 MPa;
- POST AND FOOTING REINFORCEMENT TO BE DUCTILITY CLASS N
- PANEL REINFORCEMENT TO BE DUCTILITY CLASS L

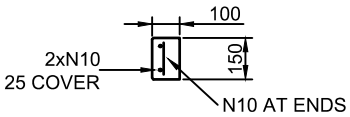

2 METRES LONG
100mm THICK SLEEPER PANEL

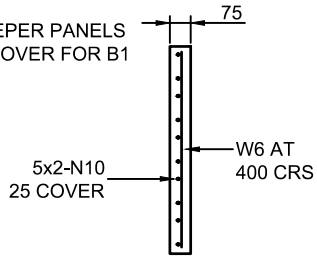

2 METRES LONG
FIVE SLEEPER PANEL

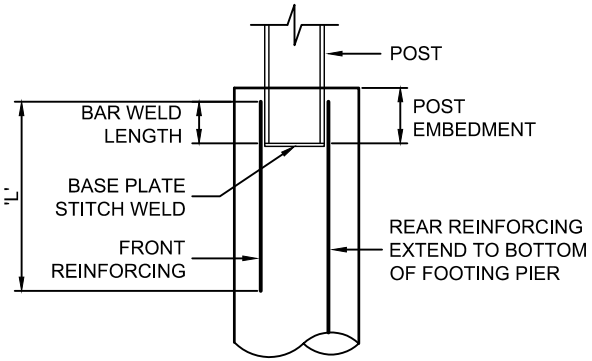

TYPICAL POST BASE DETAIL
(H = 0-2550mm)

REFER ALSO SHEET S3

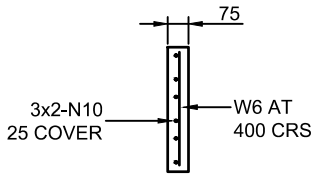

2 METRES LONG
THREE SLEEPER PANEL
FOUR AND SIX SLEEPER PANELS SIMILAR

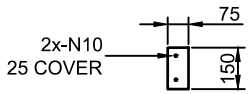

2 METRES LONG
SINGLE SLEEPER PANEL

CONCRIB
Maximising Land Values

Inertia

ABN 82 115 498 023
E-mail: info@inertiaeng.com.au
Unit 5B/85 Hudson Road
Albion, QLD 4010
Phone: 3857 7868
Fax: 3262 7359

©COPYRIGHT of this engineering design and plan is the property of INERTIA ENGINEERING Pty Ltd

PROJECT
473 MILES PLATTING ROAD
ROCHEDALE

TITLE
CONCRIB SLEEPER WALL
SYSTEM DETAILS

DESIGN	SCALE
D.M.K.	A4 Sheet : NOT TO SCALE
DRAWN	DATE
D.H.	08/2020

DRAWING NUMBER

9110	S3	A
JOB No	SHEET No	ISSUE

POST BASE DETAILS AND REINFORCING TABLE

SINGLE HEIGHT WALLS

RETAINING WALL MAX. HEIGHT 'H' (mm)	GALV. POST SIZE	POST EMBEDMENT (mm)	BASE PLATE (mm)	FRONT REINFORCING	FRONT REINFORCING LENGTH (L)	REAR REINFORCING	WELD LENGTH (mm)
750*	100 UC 15	150	6	-	-	2/N12 6CFW ONE SIDE OF EACH BAR	100
750	100 UC 15	150	6	2/N12 6CFW ONE SIDE OF EACH BAR	700	2/N12 6CFW ONE SIDE OF EACH BAR	100
900	100 UC 15	150	6	2/N16 6CFW ONE SIDE OF EACH BAR	700	2/N16 6CFW ONE SIDE OF EACH BAR	100
1350	100 UC 15	150	6	2/N16 6CFW BOTH SIDE OF EACH BAR	900	2/N16 6CFW BOTH SIDE OF EACH BAR	100
1500	100 UC 15	200	6	2/N20 6CFW BOTH SIDE OF EACH BAR	1100	2/N20 6CFW BOTH SIDE OF EACH BAR	150
2100	200 UB 22	200	10	2/N20 6CFW BOTH SIDE OF EACH BAR	1100	2/N20 6CFW BOTH SIDE OF EACH BAR	150
2400	200 UB 22	250	10	2/N24 6CFW BOTH SIDE OF EACH BAR	1400	2/N24 6CFW BOTH SIDE OF EACH BAR	200
2700	250 UB 26	250	12	2/N24 6CFW BOTH SIDE OF EACH BAR	1400	2/N24 6CFW BOTH SIDE OF EACH BAR	200
3000	250 UB 31	300	16	2/N28 6CFW BOTH SIDE OF EACH BAR	1650	2/N28 6CFW BOTH SIDE OF EACH BAR	250
3300	250 UB 37	350	20	2/N32 6CFW BOTH SIDE OF EACH BAR	1900	2/N32 6CFW BOTH SIDE OF EACH BAR	300

* DENOTES POSTS NOT ADEQUATE WITH FENCE CONNECTION.

NOTE:
H.D. GALVANISE ALL STEELWORK POSTS AFTER FABRICATION.

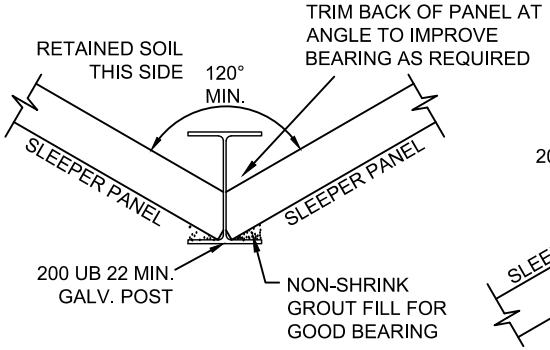

PLAN VIEW (EQUAL ANGLED POST)

REFER ALSO SHEET SK1

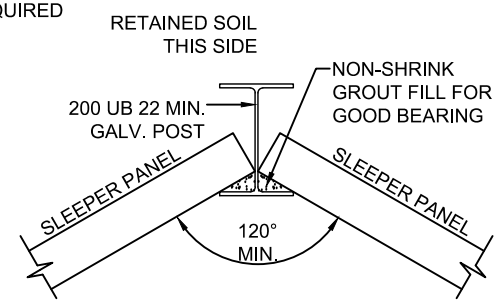

PLAN VIEW (EQUAL ANGLED POST)

REFER ALSO SHEET SK1

CONCRIB
Maximising Land Values

Inertia
ABN 82 115 498 023
E-mail: info@inertiaeng.com.au
Unit 5B/85 Hudson Road
Albion, QLD 4010
Phone: 3857 7868
Fax: 3262 7359

©COPYRIGHT of this engineering design and plan is the property of INERTIA ENGINEERING Pty Ltd

PROJECT
473 MILES PLATTING ROAD
ROCHEDALE

TITLE
CONCRIB SLEEPER WALL SYSTEM DETAILS

DESIGN	SCALE
D.M.K.	A4 Sheet : NOT TO SCALE
DRAWN	DATE
D.H.	08/2020

DRAWING NUMBER

9110	S4	A
JOB No	SHEET No	ISSUE

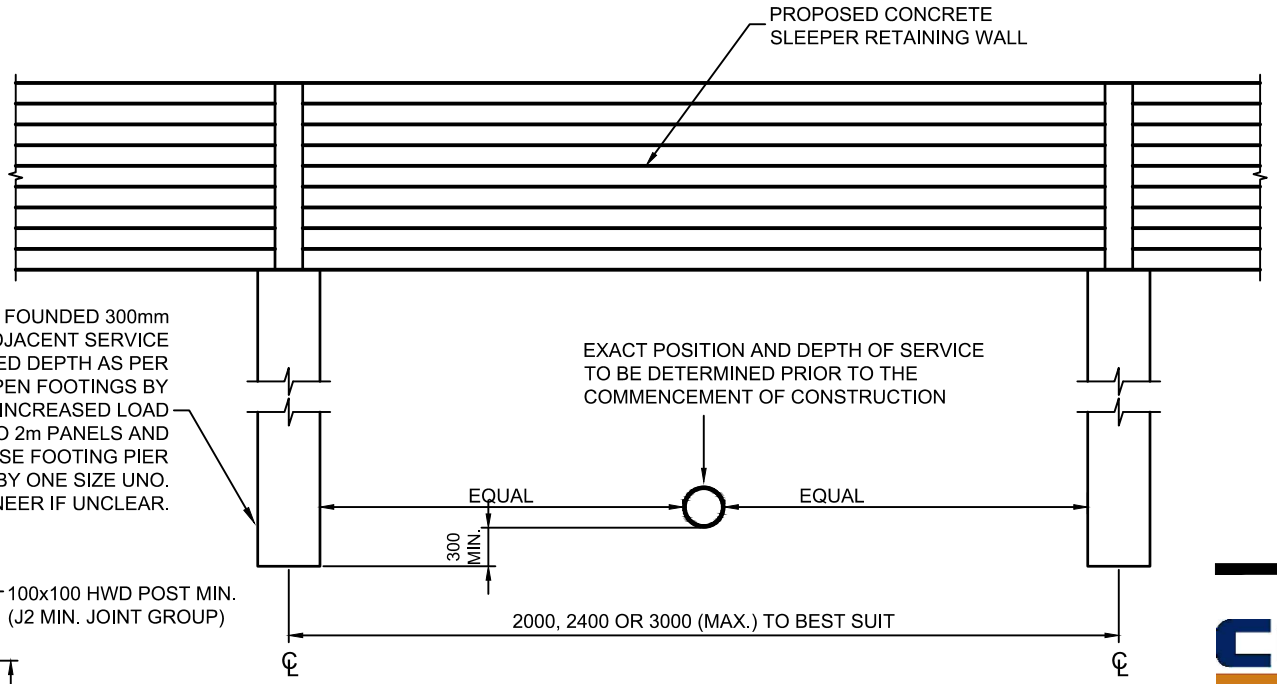

TYPICAL SLEEPER WALL BRIDGING DETAIL

NOTES:

- PROVIDE ADDITIONAL POSTS AND POSITION AS REQUIRED TO ACHIEVE CLEARANCES.

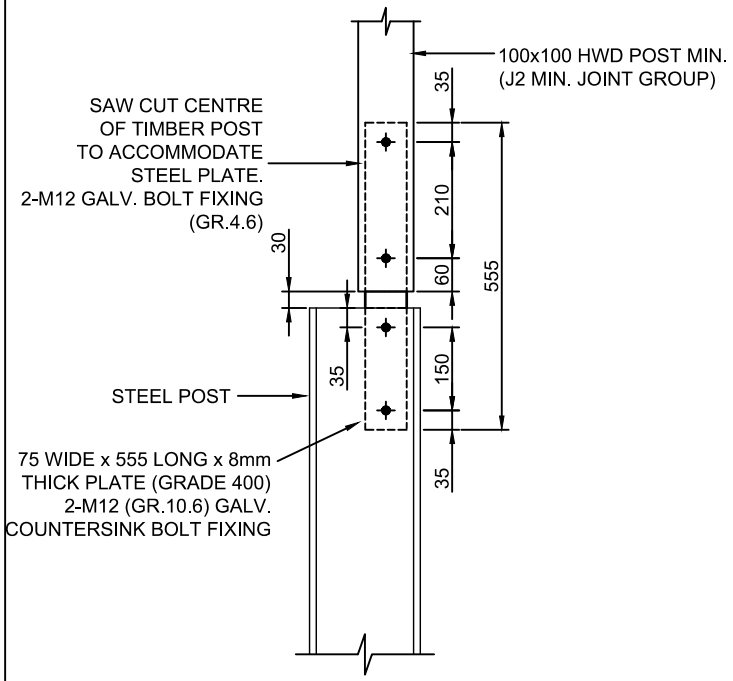

1800 MAX. FENCE HEIGHT (POSTS AT 2000 CRS.)

N2 WIND CLASSIFICATION

NOTE:
INSTALL COUNTERSINK IN 8mm THICK PLATE

CONCRIB
Maximising Land Values

Inertia
ABN 82 115 498 023
E-mail: info@inertiaeng.com.au
Unit 5B/85 Hudson Road
Albion, QLD 4010
Phone: 3857 7868
Fax: 3262 7359
©COPYRIGHT of this engineering design and plan is the property of INERTIA ENGINEERING Pty Ltd

PROJECT
473 MILES PLATTING ROAD
ROCHEDALE

TITLE
CONCRIB SLEEPER WALL
SYSTEM DETAILS

DESIGN	SCALE
D.M.K.	A4 Sheet : NOT TO SCALE
DRAWN	DATE
D.H.	08/2020

DRAWING NUMBER

9110	S5	A
JOB No	SHEET No	ISSUE

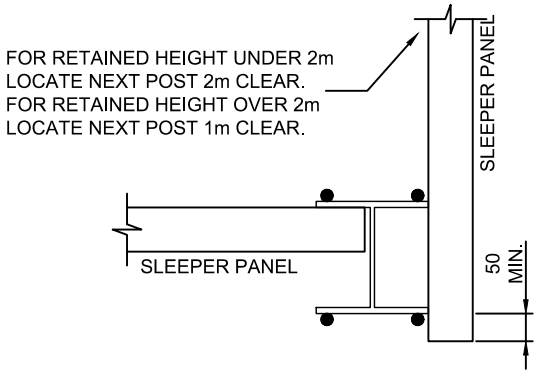

PLAN VIEW (INTERNAL CORNER POST)

NOTE: ALL 4 BARS TO BE EXTENDED TO BASE OF FOOTING.

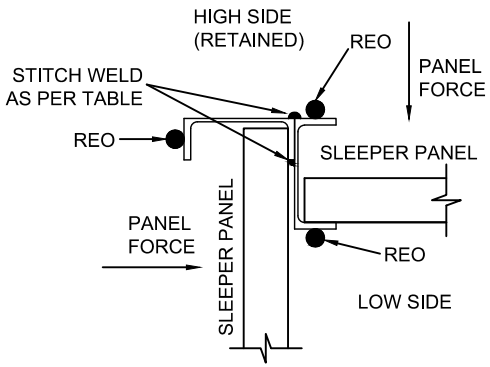

PLAN VIEW (INTERNAL CORNER POSTS OVER 2m RETAINING HEIGHT)

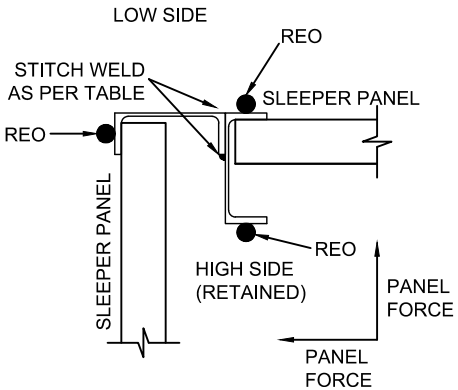

PLAN VIEW (EXTERNAL CORNER POSTS)

PFC EXTERNAL CORNER POST DETAILS AND REINFORCING TABLE

SINGLE HEIGHT WALLS

RETAINING WALL MAX. HEIGHT 'H' (mm)	GALV. POST SIZE	PIER DIA. (Ø)	POST EMBEDMENT (mm)	BASE PLATE (mm)	REINFORCING (3 BAR)	REINFORCING LENGTH (L)	WELD LENGTH (mm)	STITCH WELD BOTH SIDES OF PFC FLANGE
1200	100 PFC	450	200	6	N20	1100	150	HIT 50, MISS 100
1650	125 PFC	600	250	6	N24	1400	200	HIT 50, MISS 100
2250	150 PFC	600	300	10	N28	1650	250	HIT 50, MISS 100
2700	200 PFC	600	350	10	N32	1900	300	HIT 50, MISS 100
3000	230 PFC	750	400	10	N36	2150	350	HIT 50, MISS 100
3300	250 PFC	750	400	10	N36	2150	350	HIT 50, MISS 100

NOTE: WELD LENGTH APPLIES TO BOTH SIDES OF EACH REINFORCING BAR.
ALL 3 BARS TO BE EXTENDED TO BASE OF FOOTING PIER.

NOTE:
H.D. GALVANISE ALL STEELWORK POSTS AFTER FABRICATION.

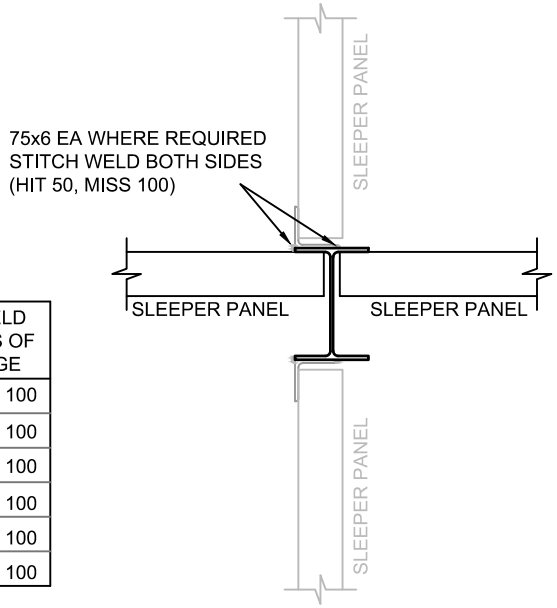

CUSTOM POST DETAIL (SPECIFIC DESIGNS)

REFER ALSO SHEET SK1

CONCRIB
Maximising Land Values

Inertia

ABN 82 115 498 023
E-mail: info@inertiaeng.com.au
Unit 5B/85 Hudson Road
Albion, QLD 4010
Phone: 3857 7868
Fax: 3262 7359

©COPYRIGHT of this engineering design and plan is the property of INERTIA ENGINEERING Pty Ltd

PROJECT
473 MILES PLATTING ROAD
ROCHEDALE

TITLE
CONCRIB SLEEPER WALL SYSTEM DETAILS

DESIGN	SCALE
D.M.K.	A4 Sheet : NOT TO SCALE
DRAWN	DATE
D.H.	08/2020

DRAWING NUMBER

9110	S6	A
JOB No	SHEET No	ISSUE